Electrical Measurements and Instrumentation (EE 2044)

Lecture 2

Logeeshan V. (Ph.D.)

Senior Lecturer

Performance Terms

- **Accuracy :** Accuracy is the extent to which the value indicated by a measurement system or element might be wrong.
  - For example, a thermometer may have an accuracy of $\pm 0.1^{o}C$.
- Accuracy is often expressed as a percentage of the full range output or full-scale deflection (f.s.d).
  - For example, a system might have an accuracy of $\pm 1\%$ of f.s.d. If the full-scale deflection is, say, 10 A, then the accuracy is $\pm 0.1\ A$.
- The accuracy is a summation of all the possible errors that are likely to occur, as well as the accuracy to which the system or element has been calibrated.

Performance Terms

- **Error :** The term error is used for the difference between the result of the measurement and the true value of the quantity being measured.

$$\boldsymbol{error = measured\ value - true\ value}$$

- Thus if the measured value is 10.1 when the true value is 10.0, the error is $+0.1$.
- If the measured value is 9.9 when the true value is 10.0, the error is -0.1.

Accuracy is the indicator of how close the value given by a measurement system can be expected to be to the true value. The **error** of a measurement is the difference between the result of the measurement and the true value of the quantity being measured.

Performance Terms

- **Error :** The term error is used for the difference between the result of the measurement and the true value of the quantity being measured.

$$\boldsymbol{error = measured\ value - true\ value}$$

- Thus if the measured value is 10.1 when the true value is 10.0, the error is $+0.1$.
- If the measured value is 9.9 when the true value is 10.0, the error is -0.1.

Accuracy is the indicator of how close the value given by a measurement system can be expected to be to the true value. The **error** of a measurement is the difference between the result of the measurement and the true value of the quantity being measured.

Error Types

- **Hysteresis error :** The term hysteresis error is used for the difference in outputs given from the same value of quantity being measured according to whether that value has been reached by a continuously increasing change or a continuously decreasing change.

  - Thus, you might obtain a different value from a thermometer used to measure the same temperature of a liquid if it is reached by the liquid warming up to the measured temperature or reached by the liquid cooling down to the measured temperature.

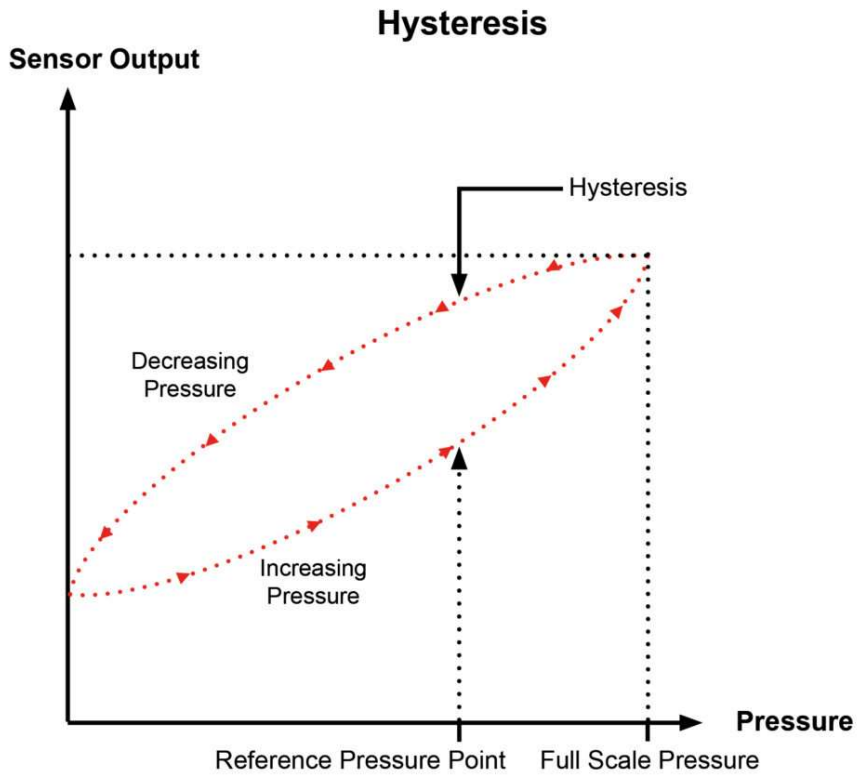

Error Types

- **Non-linearity error :** The term non-linearity error is used for the error that occurs as a result of assuming a linear relationship between the input and output over the working range.

  - Linearity error is usually expressed as a percentage error of full range or full-scale output.

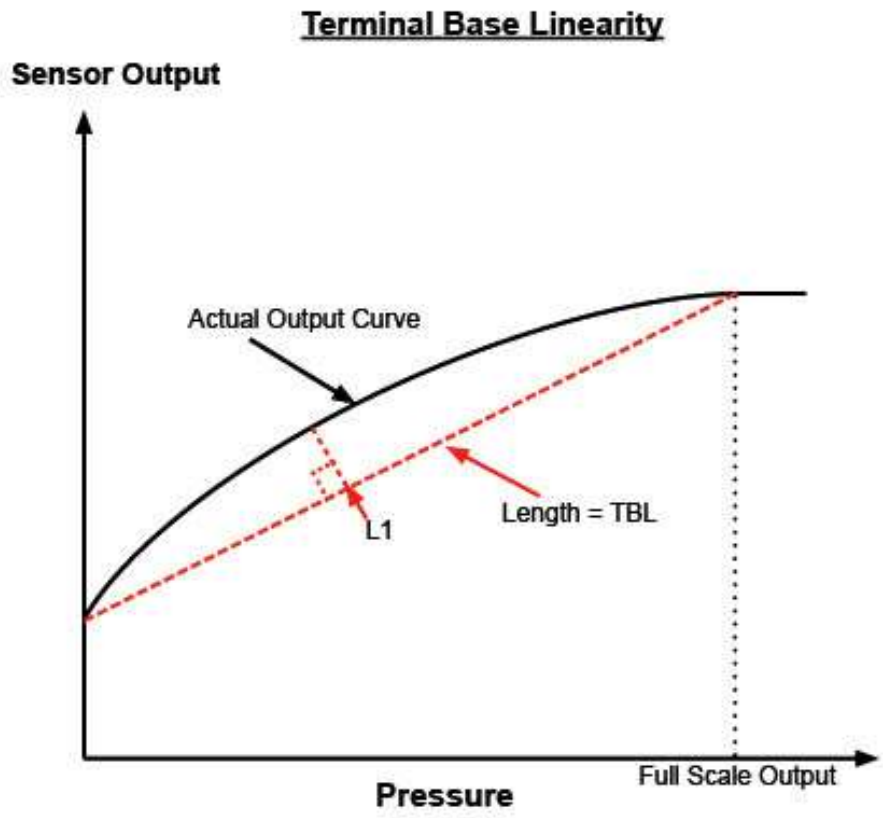

Error Types

- **Insertion error :** The act of attempting to make the measurement has modified the actual parameter being measured. This effect is called loading and the consequence as an insertion error.

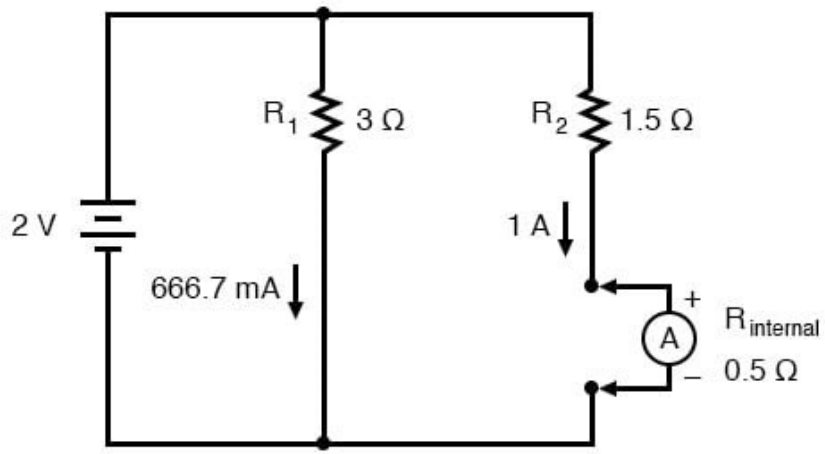

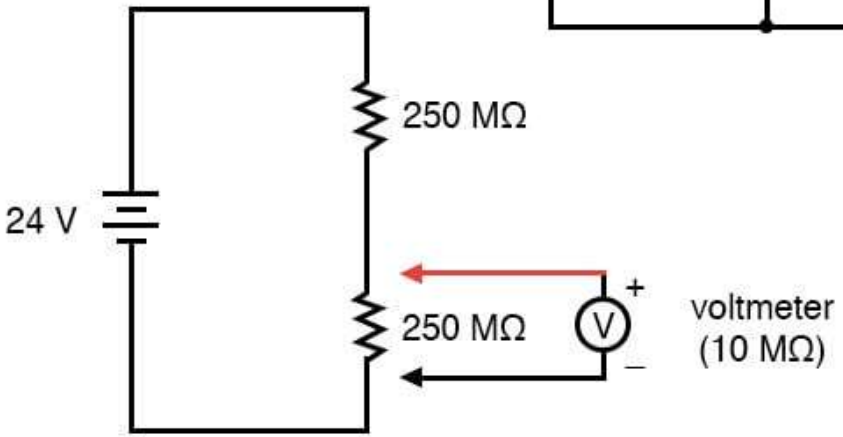

Performance Terms

- **Range:** The range of variable of system is the limits between which the input can vary.

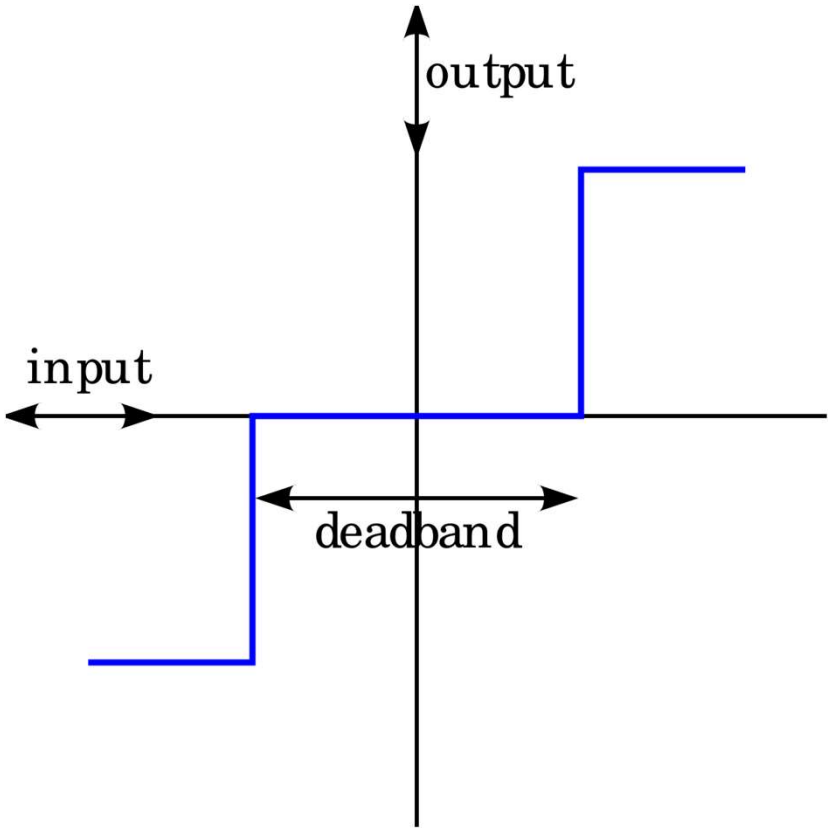

Performance Terms

- **Precision:** The term precision is used to describe the degree of freedom of a measurement system from random errors.
    - Thus, a high precision measurement instrument will give only a small spread of readings if repeated readings are taken of the same quantity.

$20.1\ mm$	$19.9\ mm$
$20.2\ mm$	$20.3\ mm$
$20.1\ mm$	$20.0\ mm$
$20.0\ mm$	$20.5\ mm$
$20.1\ mm$	$20.2\ mm$
$20.1\ mm$	$19.8\ mm$
$20.0\ mm$	$20.3\ mm$

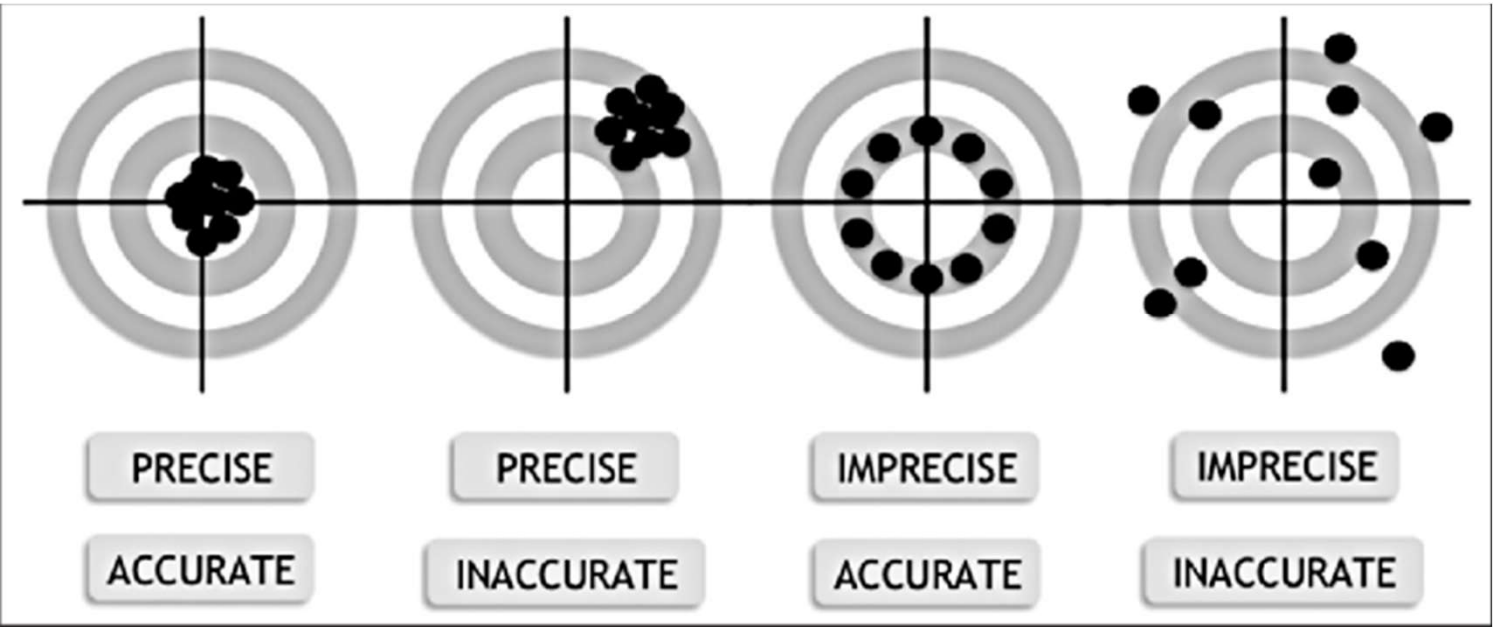

Performance Terms

- **Repeatability:** The term repeatability is used for the ability of a measurement system to give the same value for repeated measurements of the same value of a variable.

  - Common cause of lack of repeatability are random fluctuations in the environment.

  - The error arising from repeatability is usually expressed as a percentage of the full range output.

  - For example, a pressure sensor might be quoted as having a repeatability of $\pm 0.1\%$ of full range

Performance Terms

- **Reproducibility:** The term reproducibility is used to describe the ability of a system to give the same output when used with a constant input with the system or elements of the system being disconnected from its input and then reinstalled.

  - The resulting error is usually expressed as a percentage of the full range output.

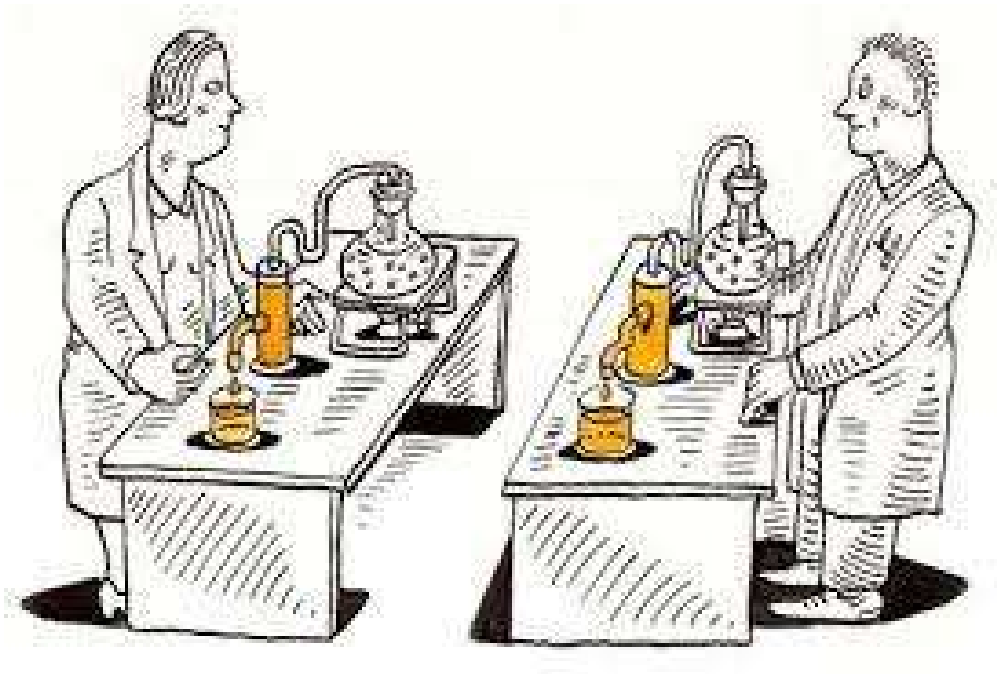

Performance Terms

The term **precision** is used to describe the degree of freedom of a measurement system from random errors. The **repeatability** of a system is its ability to give the same output for repeated applications of the same input value, without the system or element being disconnected from its input or any change in the environment in which the test is carried out. The **reproducibility** of a system is its ability to give the same output when it and/or elements of the system are disconnected from the input and then reinstalled.

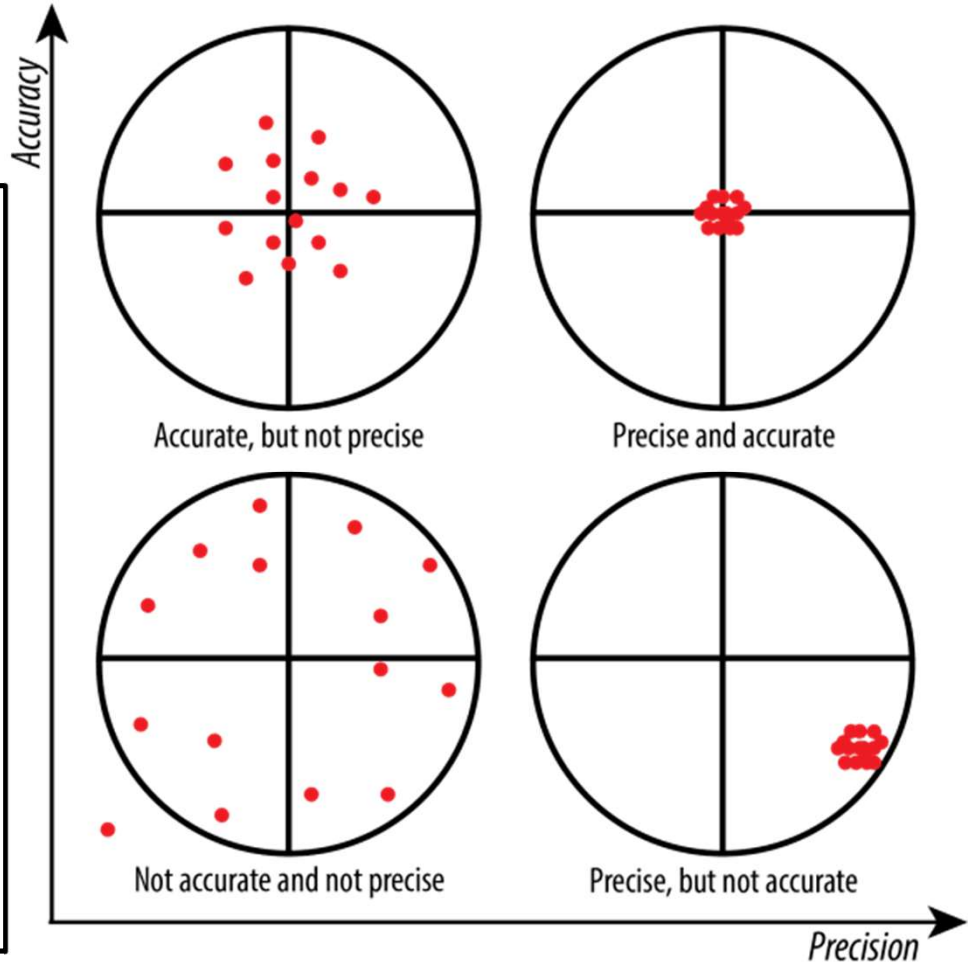

Performance Terms

- **Stability:** The stability of a system is its ability to give the same output when used to measure a constant input over a period of time.

  - The term drift is often used to describe the change in output that occurs over time.
  - The drift may be expressed as a percentage of the full range output.
  - The term zero drift is used for the changes that occur in output when there is zero input.

Dynamic Characteristics

- **Stability:** The dynamic characteristics refer to the behaviour between the time that the input value changes and the time that the value given by the system or element settles down to the steady state value.

- The meter pointer oscillates before settling down to give the steady-state reading.

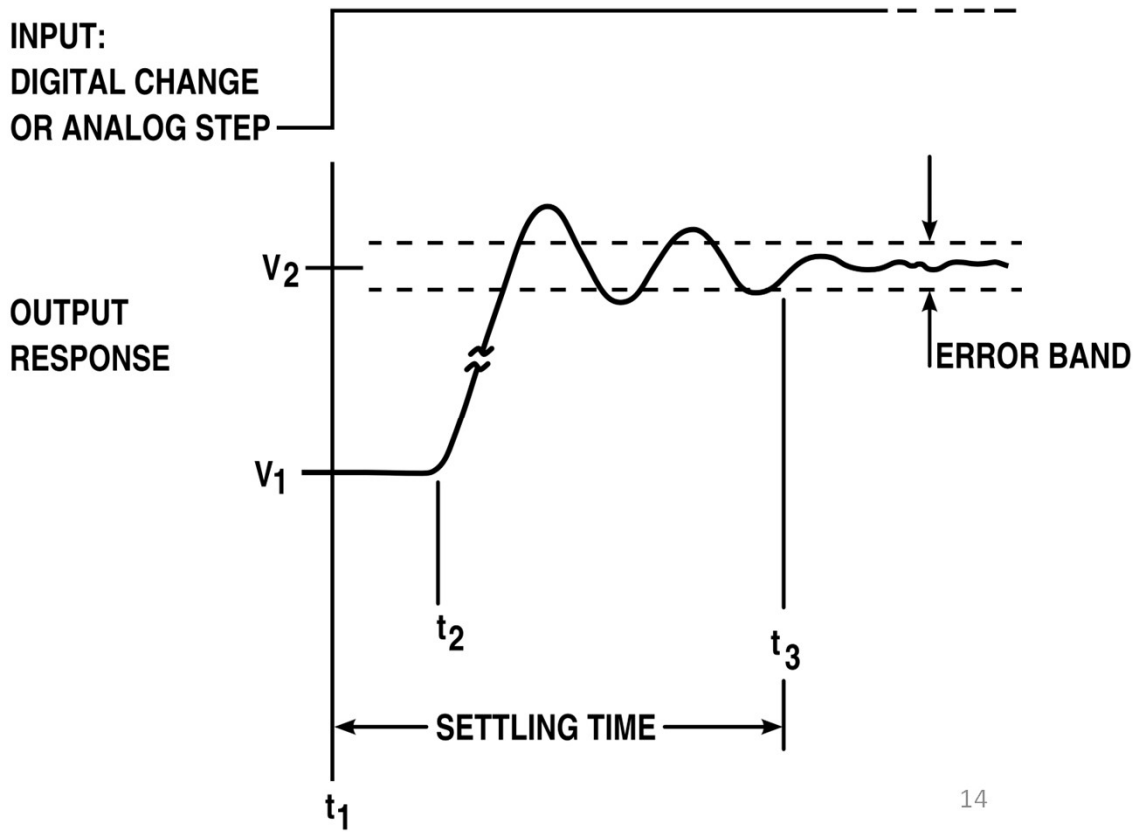

Dynamic Characteristics

- **Response time:** This is the time which elapses after the input to a system or element is abruptly increased from zero to a constant value up to the point at which the system or element gives an output corresponding to some specified percentage.

- E.g. 95%, of the value of the input.

Dynamic Characteristics

- **Rise time:** This is the time taken for the output to rise to some specified percentage of the steady-state output.

  - Often the rise time refers to the time taken for the output to rise from 10% of the steady-state value to 90 or 95% of the steady-state value.

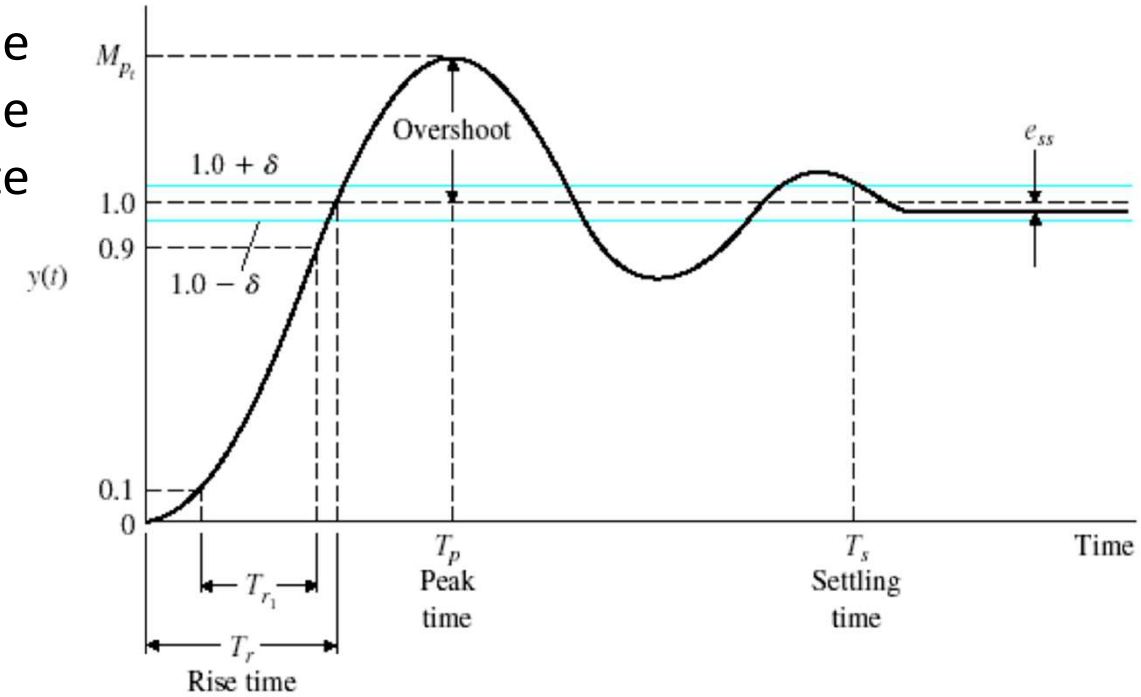

Dynamic Characteristics

- **Settling time:** This is the time taken for the output to settle to within some percentage.
  - E.g. 2% of the steady state value.

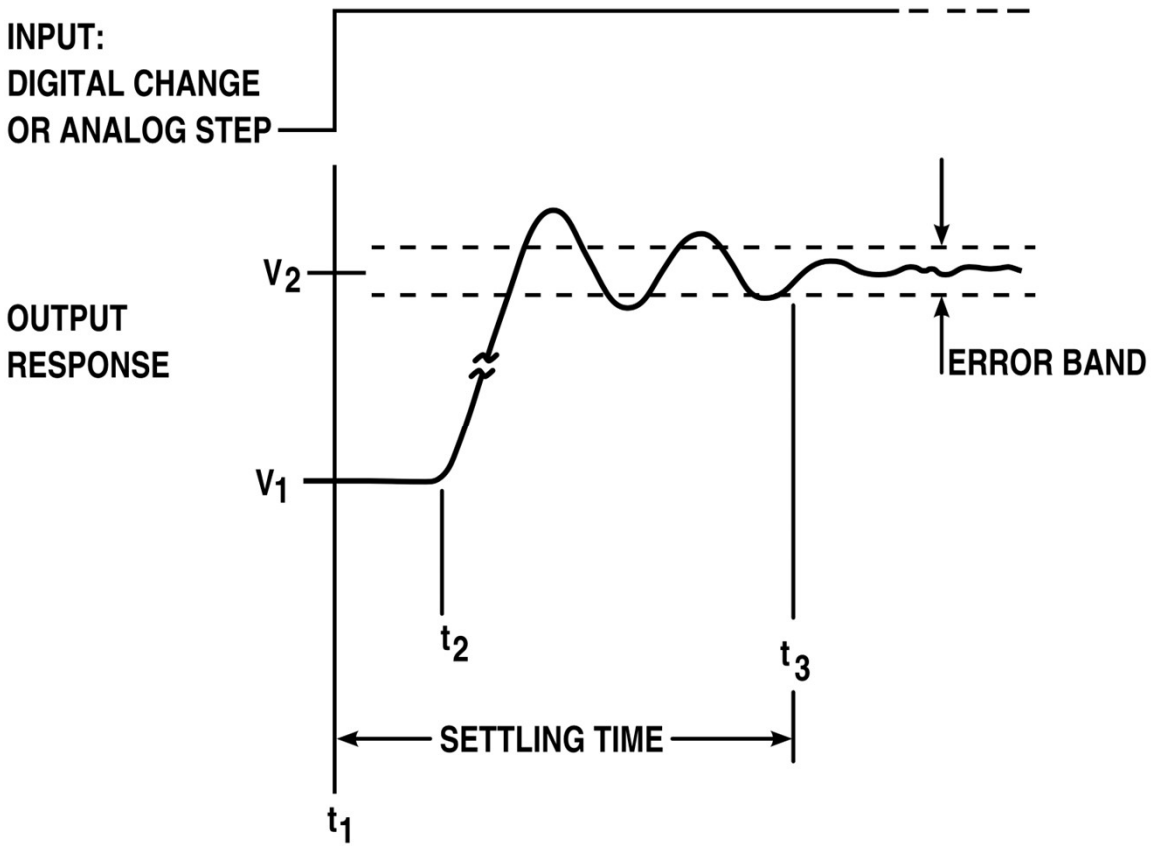

Reliability

- The probability of a particular event occurring is defined as being.

$$\boldsymbol{Probability} = \frac{\boldsymbol{number\ of\ occurrences\ of\ the\ event}}{\boldsymbol{total\ number\ of\ trials}}$$

$$P\,(\text{heads}) = \frac{1}{2} = 0.5$$

- The probability of the coin landing standing on edge can be considered to be zero, since the number of occurrences of such an event is zero.

- The closer the probability is to 1, the more frequent an event will occur; the closer it is to zero the less frequent it will occur.

Reliability

- The reliability of a measurement system, or element in such a system, is defined as being the probability that it will operate to an agreed level of performance, for a specified period, subject to specified environmental conditions.

- The agreed level of performance might be that the measurement system gives a particular accuracy.

- A high reliability system will have a low failure rate.

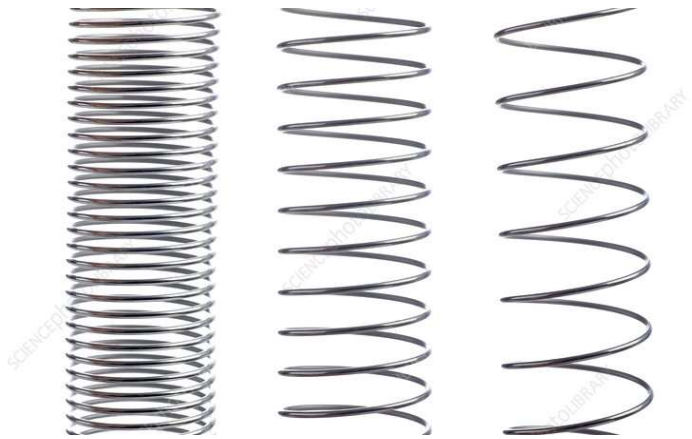

$$\boldsymbol{Failure\ Rate}: \frac{\boldsymbol{number\ of\ failures}}{\boldsymbol{number\ of\ systems\ observed \times time\ observed}}$$

Reliability

- A failure rate of 0.4 per year means that in one year, if ten systems are observed, 4 will fail to meet the required level of performance. If 100 systems are observed, 40 will fail to meet the required level of performance.

- Failure rate is affected by environmental conditions.

Reliability

- With a measurement system consisting of a number of elements, failure occurs when just one of the elements fails to reach the required performance.

- The reliability of the system might thus be markedly improved by choosing materials for the thermocouple which resist attack by the fluid.

- Thus it might be in a stainless steel sheath to prevent fluid coming into direct contact with the thermocouple wires.

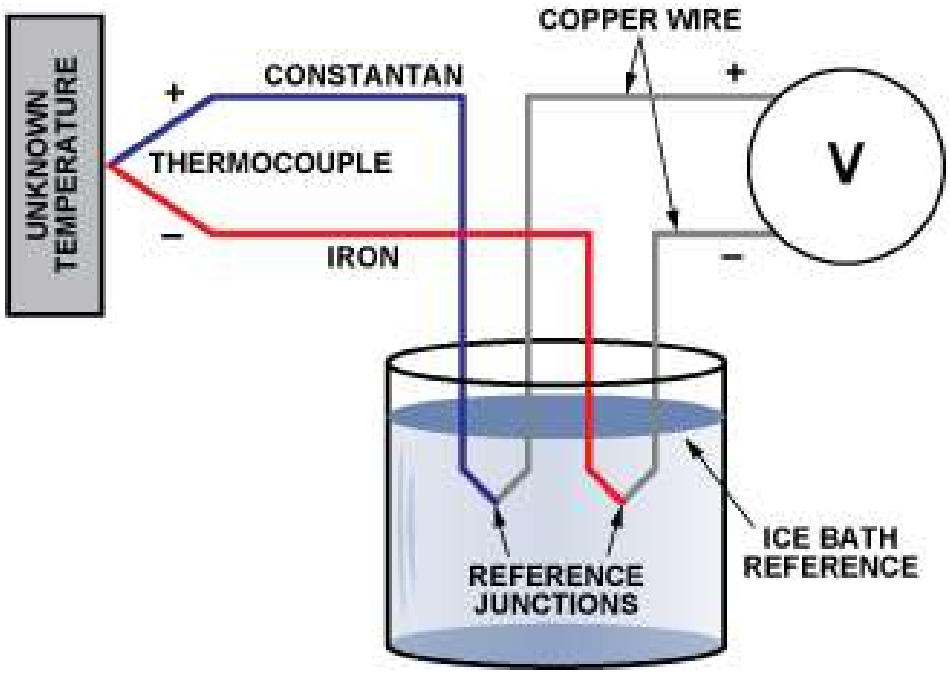

Requirements

- The main requirement of a measurement system is fitness for purpose.

- This means that if, for example, a length of a product has to be measured to a certain accuracy that the measurement system is able to be used to carry out such a measurement to that accuracy.

- If, however, the criterion is for a system with an accuracy of ±0.5 mm then the system is not fit for that purpose.

- In order to deliver the required accuracy, the measurement system must have been calibrated to give that accuracy.

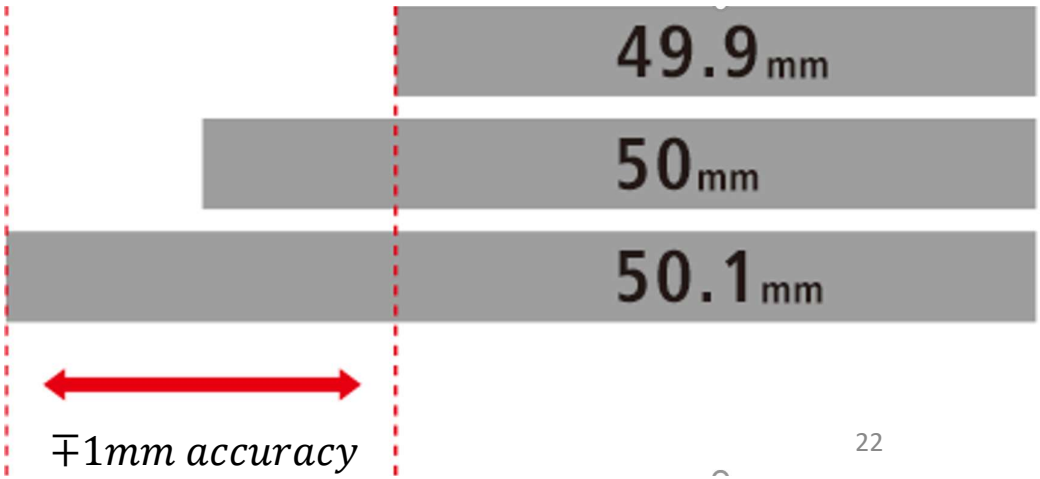

Sensor Characteristics

- Since most of stimuli are not electrical, from an input to the output, a sensor may have several energy conversion steps before it produces and outputs an electrical signal.

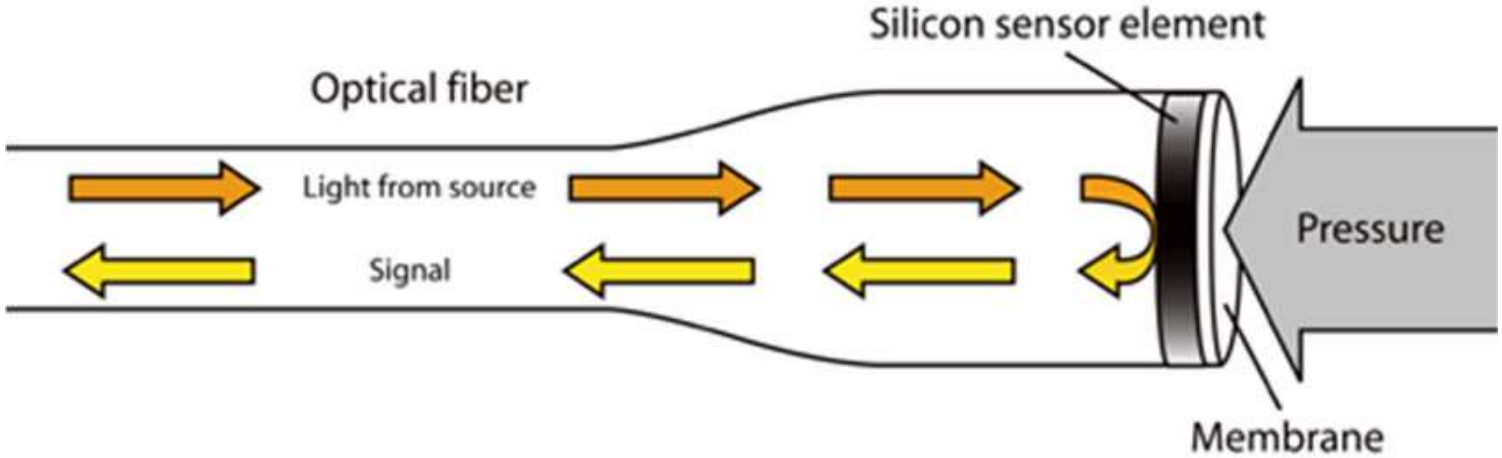

- Consider a sensor as a “black box” where we concern only with relationships between its output electrical signal and input stimulus.

System

- A system can be defined as an arrangement of parts within some boundary which work together to provide some form of output from a specified input or inputs.

- The boundary divides the system from the environment and the system interacts with the environment by means of signals crossing the boundary from the environment to the system.

- A useful way of representing a system is as a block diagram.

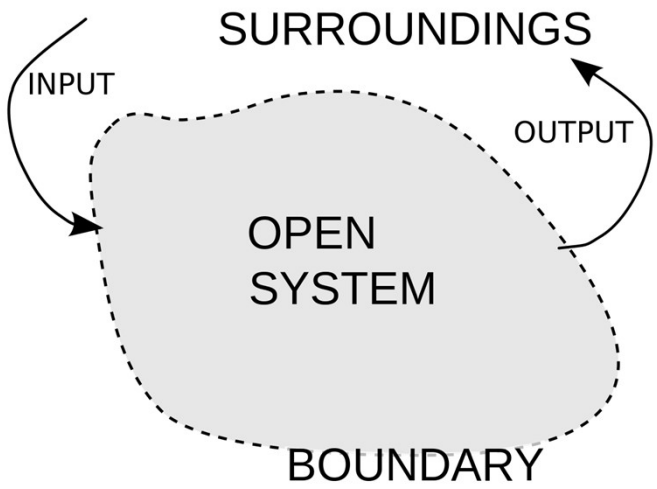

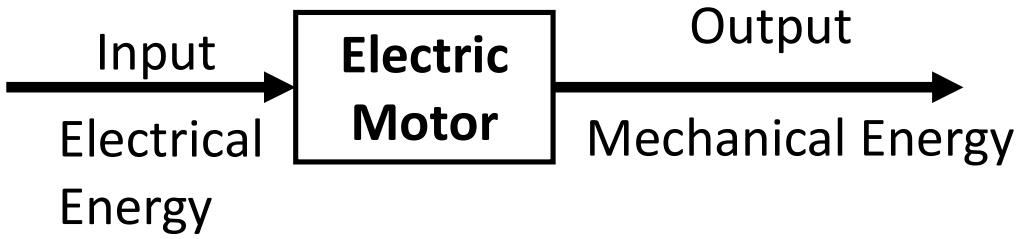

Transfer Function

- An ideal or theoretical input–output (stimulus–response) relationship exists for every sensor.

- If the input–output function is time invariant, it is commonly called transfer function.

- The transfer function represents the relation between stimulus s and response electrical signal S produced by the sensor. This relation can be written as $S = f(s)$.

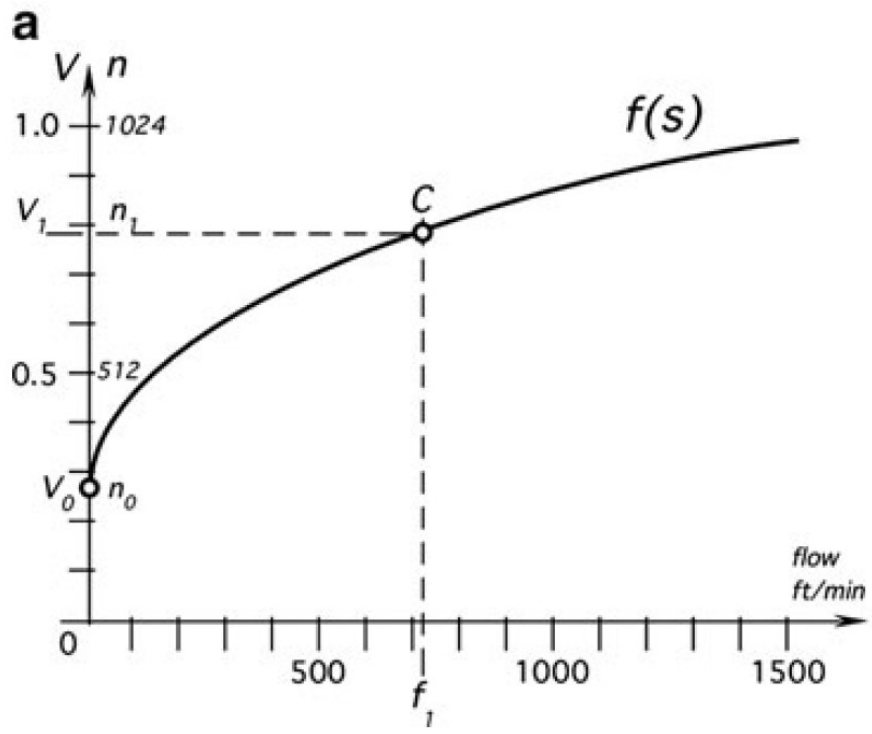

Transfer Function

- An inverse $f^{-1}(S)$ of the transfer function is required to compute the stimulus from the sensor's response S.

- The value of S that becomes known during the measurement is just a number that represents the value of stimulus s.
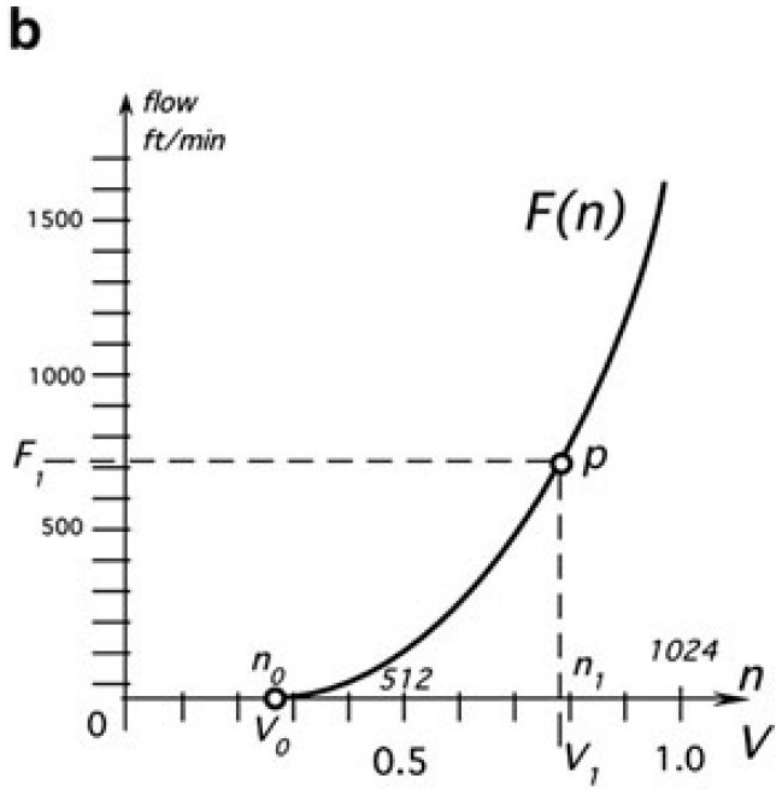
- One of the jobs of the system is to "break the code S" and infer the unknown value of s from the measured value of S.